VISION

VFM-DS

A	M6x12MM	x3	B	M6x12MM	x8
C	M6x14MM	x2			

1-A

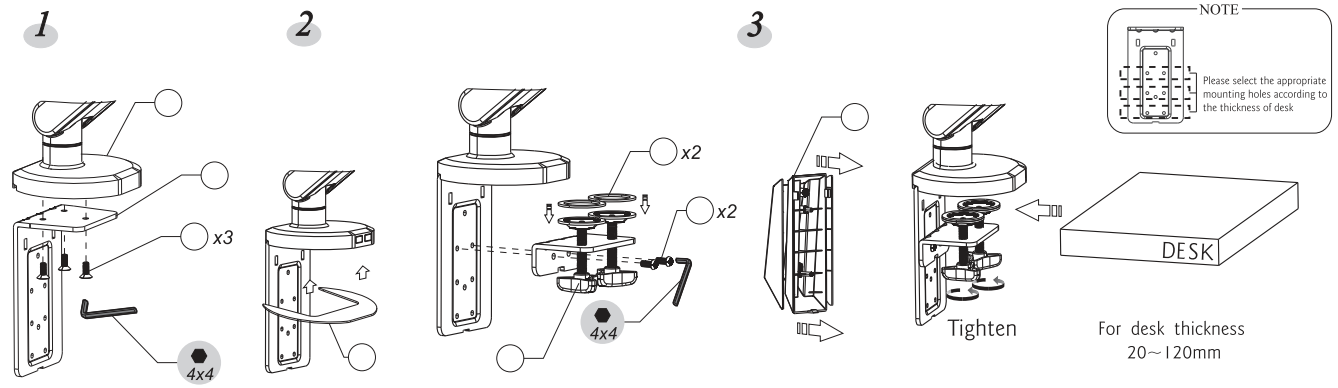

1-B

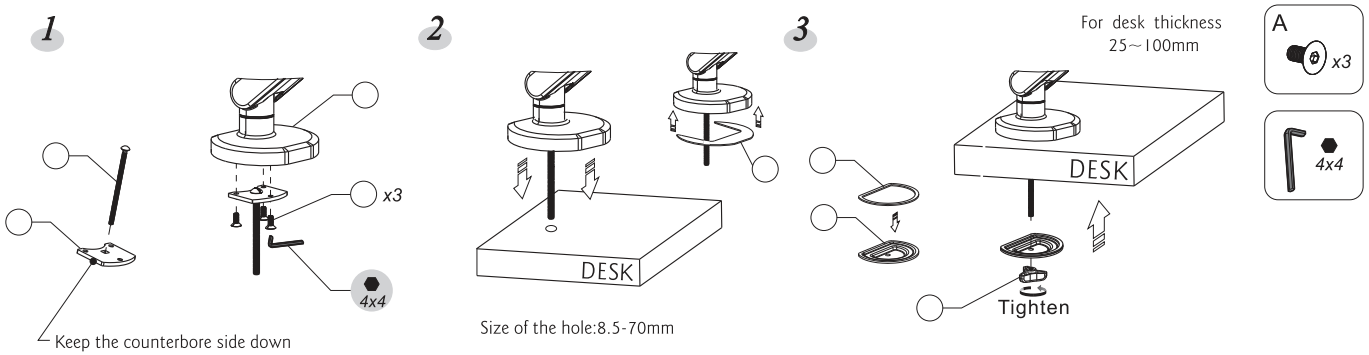

2

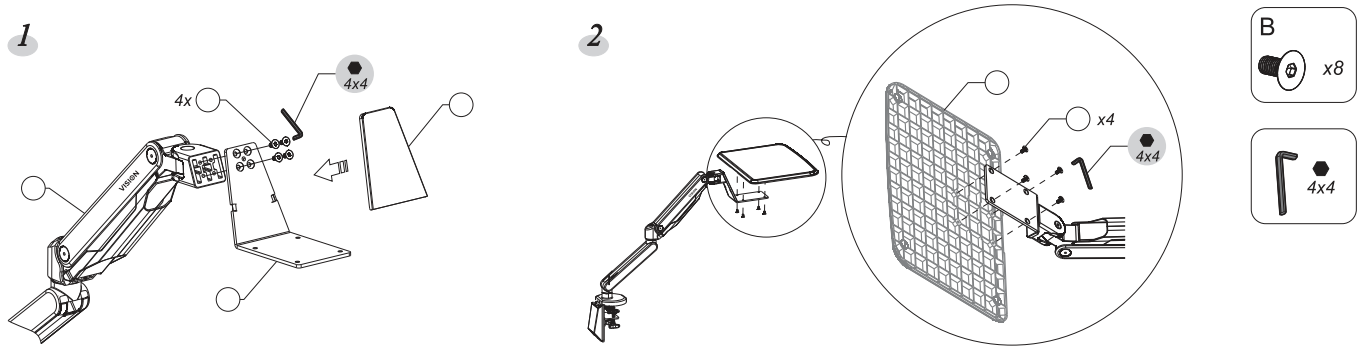

3
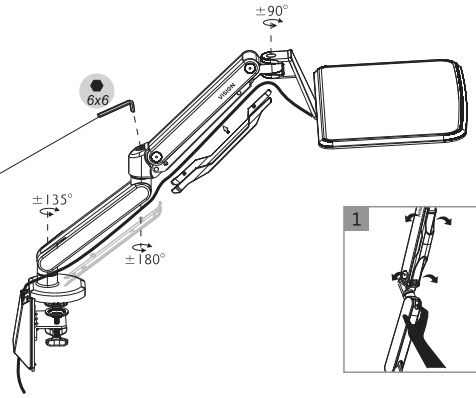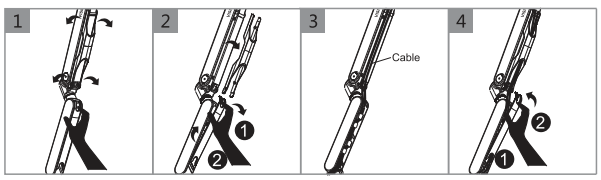
Adjust the monitor's height after installing.If the monitor cannot stop at any height,pls use the supplied 6x6 allen key to adjust the screw on the arm. To make the mount and monitor's weight equal and it can stop at any height,pls adjust the screw in "-"directionwhen the monitor up and "+" direction whenit down.